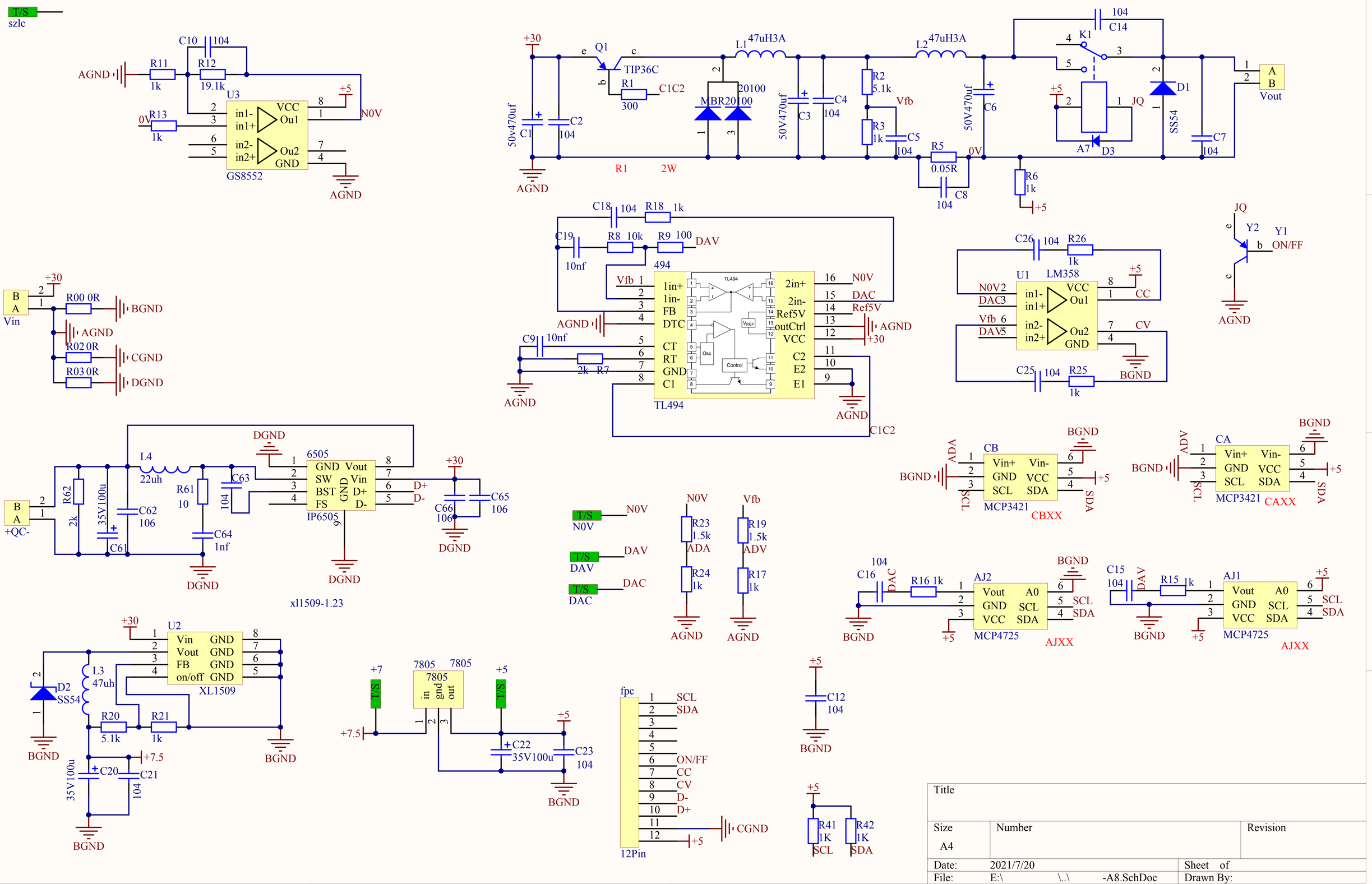

Title		
Size A4	Number	Revision
Date: 2021/7/20		Sheet of
File: E:\ \..\ -A8.SchDoc		Drawn By: